AL-AXL

Dimensions AL

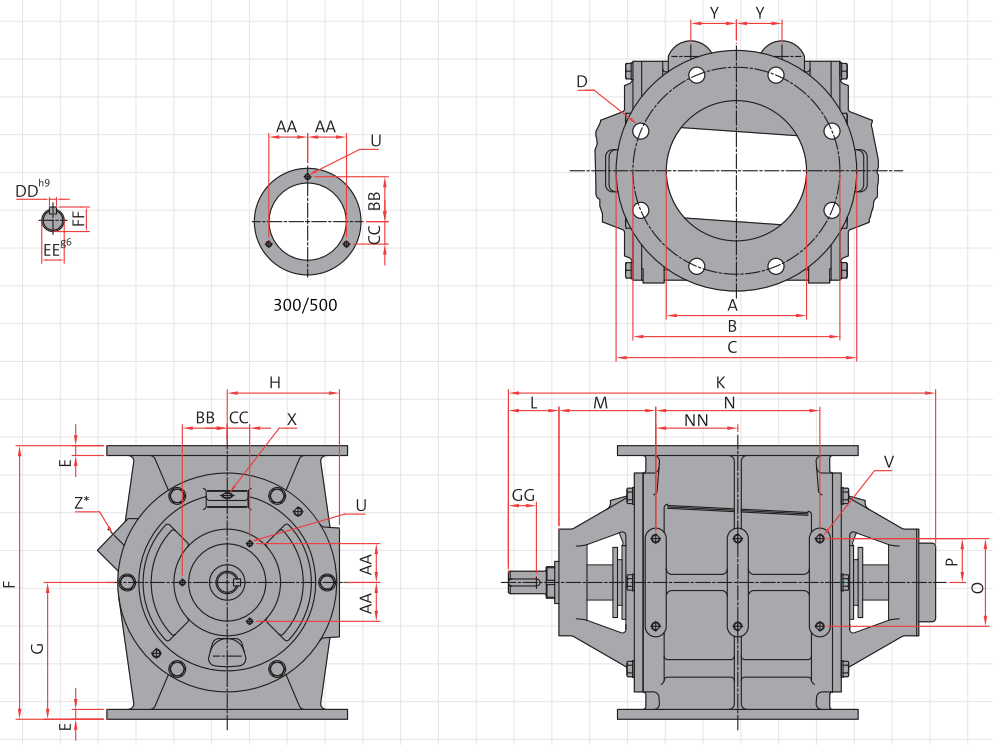

Type			AL								AXL									
				DIN			ANSI					DIN			ANSI					
AL	AXL	Ft³/rev	ØA	ØB	D	ØC	ØB	D	E	H	ØA	ØB	D	ØC	ØB	D	E	H	F	G
100		0.03	3.94	6.69	4xØ0.71	8.27	–	–	0.41	3.54									7.09	3.54
150		0.09	5.91	9.45	8xØ0.91	11.22	9.50	8xØ0.87	0.47	4.33									11.02	5.51
175	200	0.19	6.89	10.63	8xØ0.91	12.40	–	–	0.55	5.12	7.87	11.61	8xØ23	13.50	11.75	8xØ22.2	0.55	6.50	12.99	6.50
200	250	0.37	7.87	11.61	8xØ0.91	13.50	11.75	8xØ0.87	0.55	6.30	9.84	13.78	12xØ23	15.98	14.25	12xØ25.4	0.63	7.78	15.35	7.68
250	300	0.67	9.84	13.78	12xØ0.91	15.98	14.25	12xØ1.00	0.63	7.48	11.81	15.75	12xØ23	19.02	17.00	12xØ25.4	0.83	8.76	17.72	8.86
300	350	1.20	11.81	15.75	12xØ0.91	19.02	17.00	12xØ1.00	0.83	8.86	13.78	18.11	16xØ23	20.87	18.75	12xØ28.6	0.83	8.86	21.26	10.63
350		2.05	13.78	18.11	16xØ0.91	20.87	18.75	12xØ1.13	1.02	10.63									25.98	12.99
400		3.21	15.75	20.28	16xØ1.02	23.43	21.25	16xØ1.13	1.02	12.80									29.53	14.76
450		4.77	17.72	22.24	20xØ1.02	25.00	22.75	16xØ1.25	1.02	14.96									33.66	16.83
500		8.12	19.69	24.41	20xØ1.06	27.56	25.00	20xØ1.25	1.10	17.13									37.80	18.90

Type																				
AL	AXL	K	L	M	N	NN	O	P	U	V	X	Y	Z*	AA	BB	CC	DD	EE	FF	GG
100		12.91	2.13	3.31	3.54	–	2.95	1.28	2xM6	4xM8	⅛" BSP (Ø10)	–	–	1.38	–	–	0.31	0.98	1.10	1.54
150		19.06	2.36	5.00	5.75	–	3.94	1.97	3xM6	4xM10	¼" BSP (Ø10)	1.57	¾" BSP	1.46	2.07	1.46	0.31	1.18	1.30	1.42
175	200	20.63	2.36	4.92	7.48	–	3.94	1.97	3xM6	4xM10	¼" BSP (Ø10)	2.09	1" BSP	1.46	2.07	1.46	0.31	1.18	1.30	1.42
200	250	23.98	2.83	5.43	9.21	–	4.92	2.46	3xM8	4xM12	¼" BSP (Ø10)	2.56	1¼" BSP	2.18	2.52	1.26	0.39	1.26	1.38	1.73
250	300	25.94	2.83	5.43	11.18	5.59	4.92	2.46	3xM8	6xM12	¼" BSP (Ø10)	2.95	1¼" BSP	2.18	2.52	1.26	0.39	1.26	1.38	1.73
300	350	30.04	2.91	5.91	14.17	7.09	4.92	2.46	3xM10	6xM12	⅜" BSP (Ø10)	3.74	1½" BSP	2.90	3.35	1.67	0.39	1.50	1.61	1.77
350		32.80	2.91	6.10	16.54	8.27	4.92	2.46	3xM10	6xM12	⅜" BSP (Ø10)	4.41	1½" BSP	2.90	3.35	1.67	0.39	1.50	1.61	1.77
400		37.17	4.25	6.06	19.69	9.84	7.87	3.94	3xM10	6xM16	⅜" BSP (Ø10)	4.92	2" BSP	2.90	3.35	1.67	0.55	1.97	2.13	2.76
450		41.42	4.37	6.69	22.52	11.26	11.81	5.91	3xM10	6xM16	⅜" BSP (Ø10)	6.42	2" BSP	2.90	3.35	1.67	0.71	2.36	2.52	2.76
500		45.16	4.33	6.73	25.59	12.80	13.39	5.12	3xM10	6xM16	⅜" BSP (Ø10)	7.09	2" BSP	3.92	4.53	2.26	0.71	2.36	2.52	2.76

* Standard pre-drilled for cast iron | Standaard voorgeboord bij gietijzer | Standard gebohrt in Gußeisen | Standard percé pour fonte | Standard pre-taladrado para fundicion de Fe | Standard preforato per ghisa | Standardowo otwory w żeliwie | Предварительно изготовленные отверстия стандартны для чугуна

© DMN-WESTINGHOUSE 16/06

DMN INCORPORATED

Technical modifications are possible, dimensions in inches | Technische wijzigingen voorbehouden, maten in inches | Technische Änderungen vorbehalten, Maße in Inches | Changements d'exécutions techniques réservés, dimensions en pouces | Son posibles variaciones técnicas, dimensiones en pulgadas | Sono possibili variazioni tecniche, dimensioni in pollici | Możliwe są modyfikacje techniczne, wymiary w calach | Сохраняется право на внесение технических изменений, размеры в дюймах

www.dmn-inc.com